REVISIONS			
REV	ECO	DATE	DESCRIPTION
--	--	--	RELEASED TO PRODUCTION

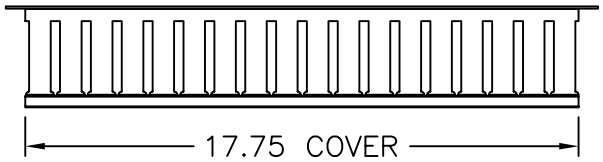

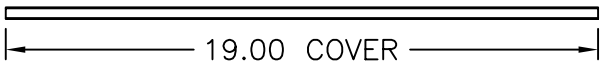

TOP VIEW
(OPTIONAL 19" COVER SHOWN)

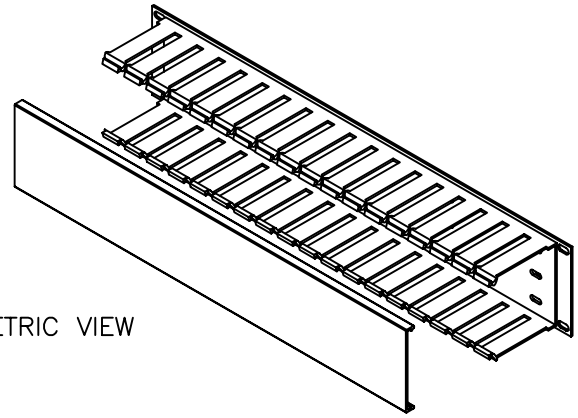

ISOMETRIC VIEW

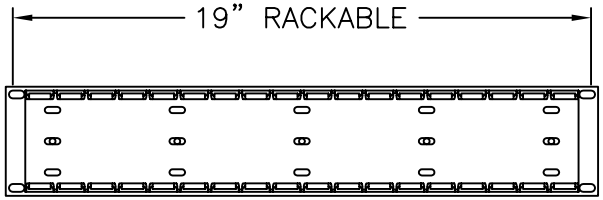

FRONT VIEW
(SHOWN W/COVER REMOVED)

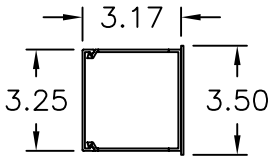

SIDE VIEW

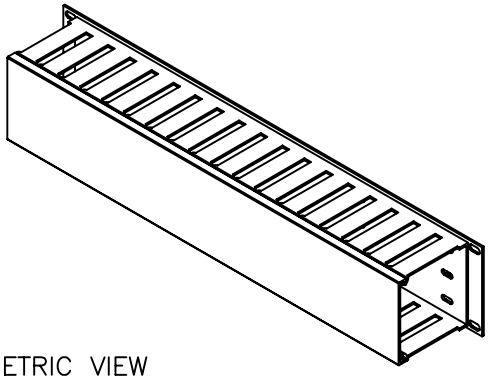

ISOMETRIC VIEW
(SHOWN ASSEMBLED)

DAMAC PRODUCTS INC. LA MIRADA, CA 90638	ALL INFORMATION ARE PROPRIETARY DATA OF DAMAC PRODUCTS INC. ANY REPRODUCTION/USE IN ANY FORM MUST HAVE PRIOR WRITING AGREEMENT W/ DAMAC. TOLERANCE .XXX±.010 .XX±.030 .X±.060 °(DEG)±.5 ALL DIM. ARE IN INCHES UNLESS OTHERWISE SPECIFIED	TITLE: CONDUIT, MOUNT, 19"RACK 19.00 x 3.50 x 3.17 W/17.75" COVER	PART NO. F533-P1933	CHECKED BY: CR	SCALE: N/A	MATERIAL: PANDUIT TYPE G FINISH: BLACK MAX BEND R=.030, RELIEF=.060 A/R. UNLESS OTHERWISE SPECIFIED	
			DRAWN BY: AP	DATE: 10.10.2006	SHEET: 1 OF 1	REV: --	