REVISIONS			
REV	ECO	DATE	DESCRIPTION
--	--	--	RELEASED TO PRODUCTION

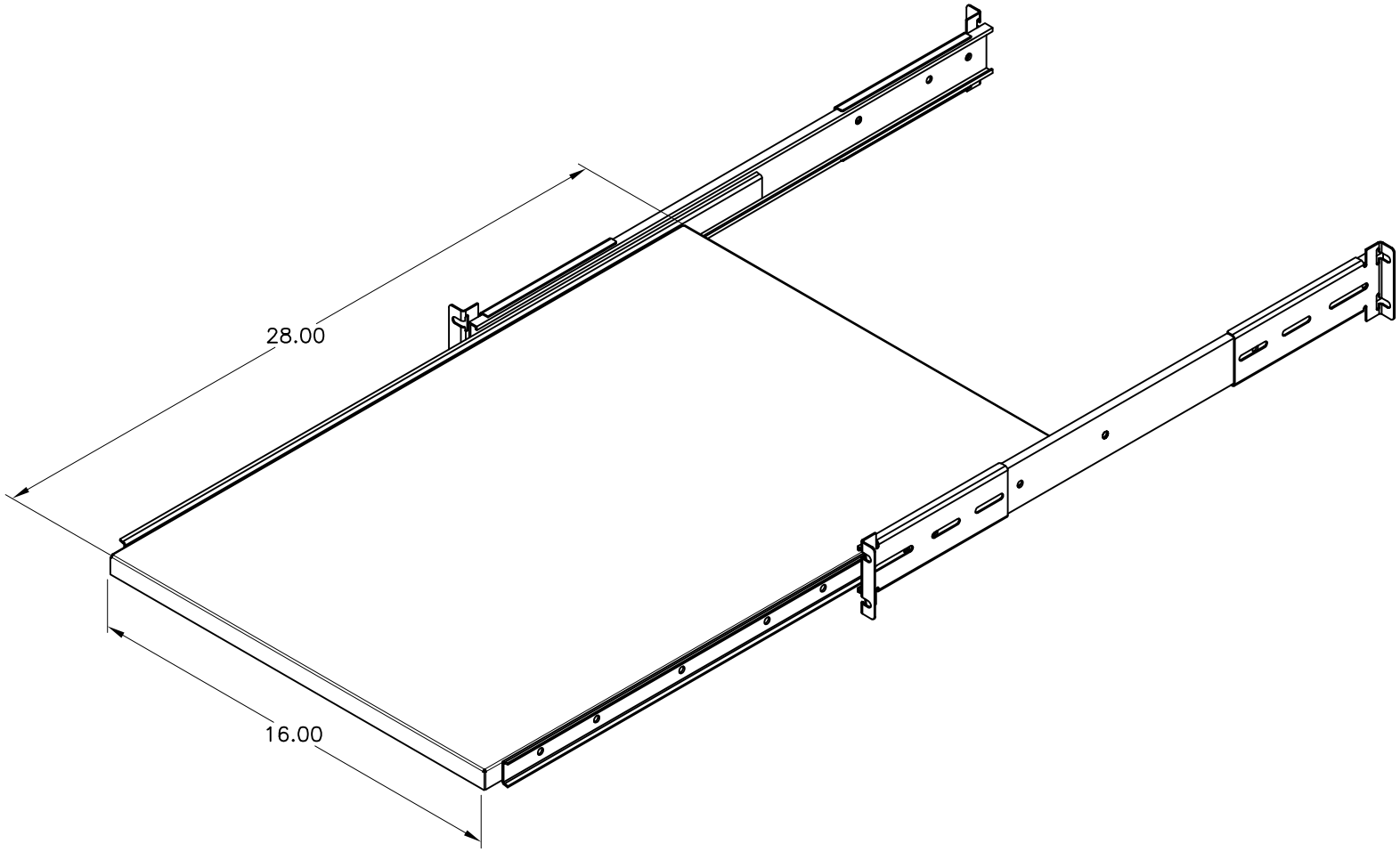

DAMAC PRODUCTS INC.
LA MIRADA, CA 90638

ALL INFORMATION ARE PROPRIETARY DATA OF DAMAC PRODUCTS INC. ANY REPRODUCTION/USE IN ANY FORM MUST HAVE PRIOR WRITING AGREEMENT W/ DAMAC.

TOLERANCE .XXX±.010 .XX±.030 .X±.060 °(DEG)±.5
ALL DIM. ARE IN INCHES UNLESS OTHERWISE SPECIFIED

TITLE: SHELF, ROLL-OUT 19.00" RACKABLE 29" DEEP, HEAVY DUTY

PART NO.	CHECKED BY:	SCALE:
SH1929RHS-3	--	N/A
DRAWN BY: AP / DATE: 04.01.2008	SHEET: 1 OF 1	REV: --

MATERIAL: N/A
FINISH: POWDER-COATED BLACK
MAX BEND R=.030, RELIEF=.060 A/R.
UNLESS OTHERWISE SPECIFIED