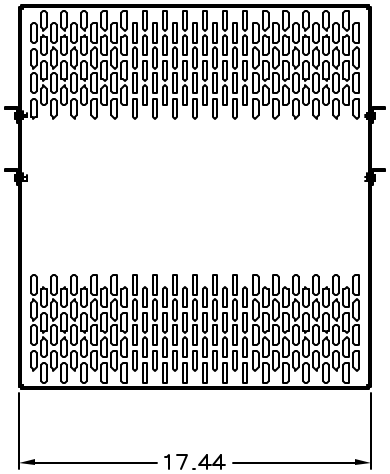

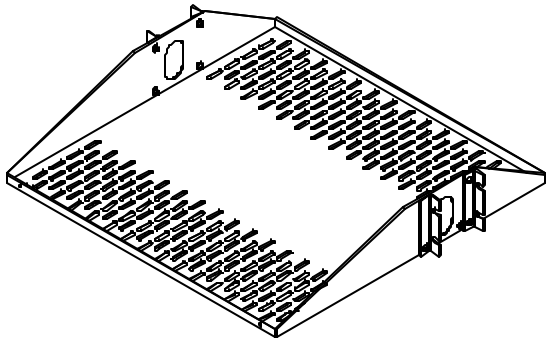

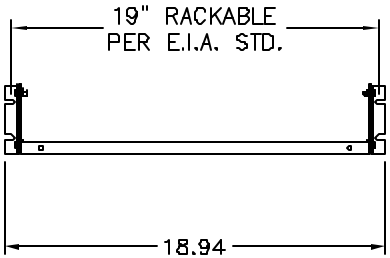

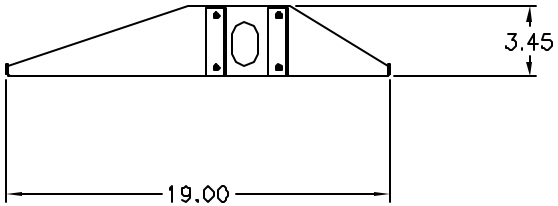

DAMAC PRODUCTS INC. LA MIRADA, CA. 90638	ALL INFORMATION ARE PROPRIETARY DATA OF DAMAC PRODUCTS INC. ANY REPRODUCTION/USE IN ANY FORM MUST HAVE PRIOR WRITING AGREEMENT W/ DAMAC. TOLERANCE .XXX±.010 .XX±.030 .X±.060 TOLERANCE ALL DIM. ARE IN INCHES UNLESS OTHERWISE SPECIFIED	TITLE: SHELF, CENTER MOUNT 19" RACKABLE, 19" DEEP PERF., 2 RACK SPACE	PART NO. SRA1919CP	CHECKED BY RG	SCALE: N/A	MATERIAL: ALUM. FINISH: RAW(NON-FINISHED). MAX BEND R=.030. RELIEF=.060 A/R. UNLESS OTHERWISE SPECIFIED
			DRAWN BY: CR	DATE: 03.20.2002	SHEET: 1 OF 1	REV: --